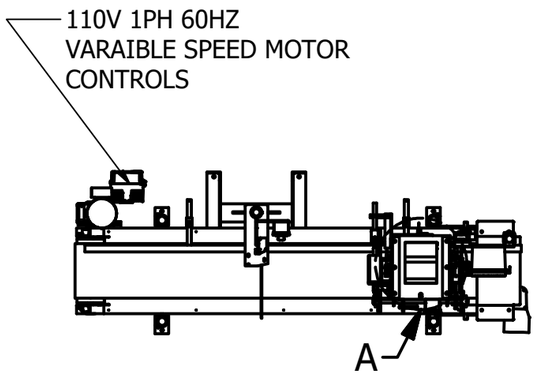

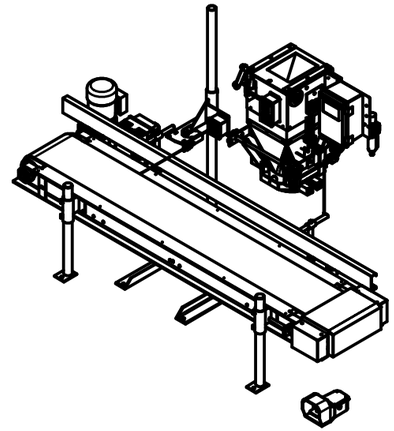

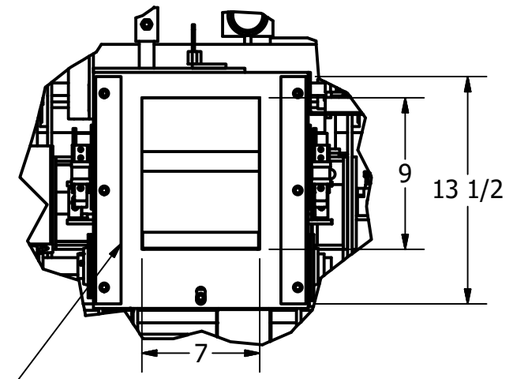

DETAIL A

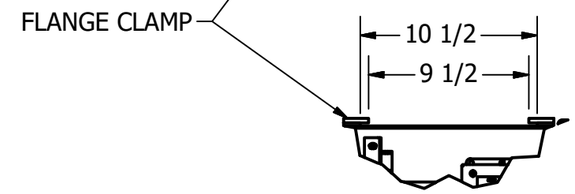

DETAIL B

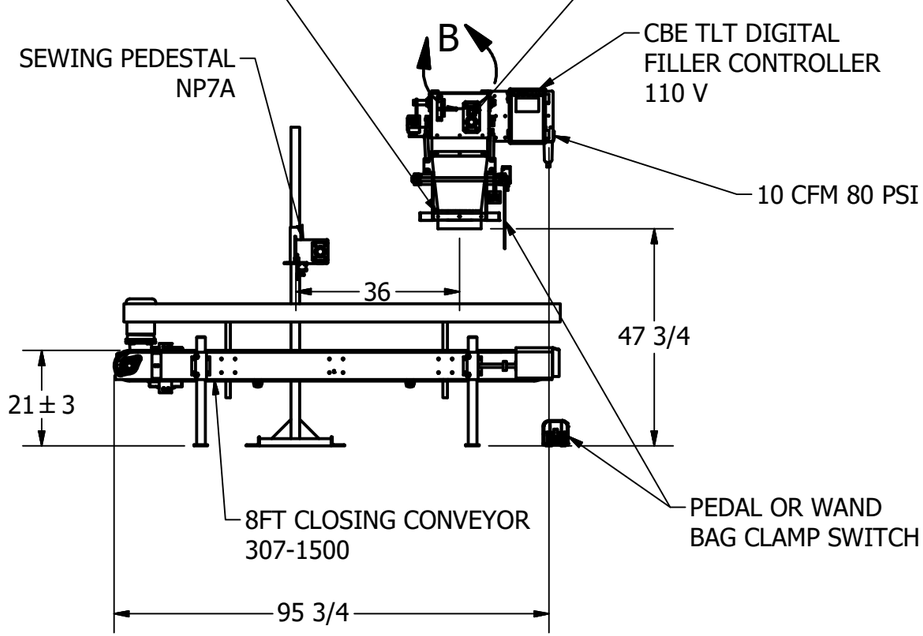

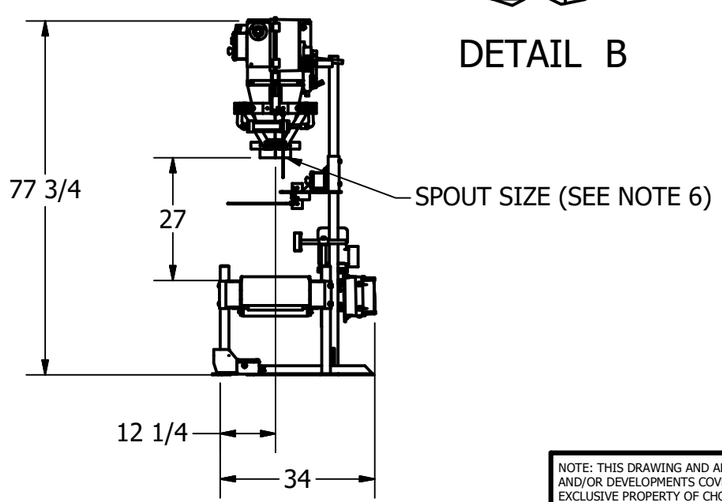

GWB BAGGER SYSTEM SPECIFICATIONS

1. PRODUCT - GRANULAR, FREE FLOWING PRODUCTS (3-60 MESH) 6730-250 MICRON
2. NON PRODUCT CONTACTING SURFACES:
   CARBON STEEL
3. PRODUCT CONTACT SURFACES:
   CARBON STEEL
   OR 304 STAINLESS STEEL AVAILABLE
4. ELECTRICAL:
   CBE CONTROLLER:
   110V / 1PH/ 60HZ
   NP7A SEWING HEAD:
   110V/ 1PH/ 60HZ
   307-1500 CONVEYOR:
   110V / 1PH/ 60HZ
5. PNEUMATIC:
   10 CFM 80 PSI AT BAGGER
6. BAG LENGTH
   MAX 30"
   MIN 24"
7. SPOUT SIZES AVAILABLE:
   21" CIRCUMFERENTIAL
   27" CIRCUMFERENTIAL
   31" CIRCUMFERENTIAL
8. RECOMMENDED FLANGE SIZE:
   10 3/8" X 12 1/2" X 1/4"
9. ALL DIMENSIONS IN INCHES

REVISION HISTORY			
REV	DESCRIPTION	DATE	AUTHOR
A	INITIAL	4/10/2020	BR

NOTE: THIS DRAWING AND ALL DESIGNS, DETAILS INVENTIONS AND/OR DEVELOPMENTS COVERED ARE CONFIDENTIAL AND THE EXCLUSIVE PROPERTY OF CHOICE BAGGING EQUIPMENT LTD. WHICH RESERVES ALL PATENT AND OTHER RIGHTS. IT IS NOT TO BE PRINTED, PHOTOGRAPHED, COPIED, LOANED OR USED WITHOUT PERMISSION. IT MUST BE RETURNED ON REQUEST AND USED SUBJECT TO THE ABOVE CONDITIONS AND ONLY ON WORK AUTHORIZED BY CHOICE BAGGING EQUIPMENT LTD.

UNLESS OTHERWISE SPECIFIED
DIMENSIONS ARE IN INCHES
TOLERANCES:
FRACTIONAL: ±1/32
ANGULAR: ±0.5°
DECIMAL: .XX = ± .030 .XXX = ± .015

CHOICE BAGGING EQUIPMENT, LTD.
4804 N. MAIN ST , P.O. BOX 81
TAYLOR, TX 76574
Phone: (512) 352-3694
Fax: (512) 352-8958
Website: www.findtherightbagger.com
Email: sales@valvebagfiller.com

GWB w/SEW4
GENERAL ARRANGEMENT DRAWING

SHEET 1 OF 4

DRAWN:	CHECKED:	DATE	SCALE	DRAWING NO.	REV.
brian		3/11/2020	NTS	GWB Options	A